OWNER'S MANUAL

Quality. Uncompromised.

ROTEL®

AM/FM STEREO RECEIVER **RX-550**

MW/LW/FM STEREO RECEIVER **RX-550L**

WARNING: TO PREVENT FIRE OR SHOCK HAZARD, DO NOT EXPOSE THIS APPLIANCE TO RAIN OR MOISTURE

Write your **SERIAL NUMBER** here.
The number is located near the name plate on the unit's rear panel.

THE ROTEL CO., LTD.

1-36-8 Ohokayama, Meguro-ku, Tokyo, Japan

INTRODUCTION

We at Rotel want to thank you for purchasing our audio product.

Rotel audio products are designed to use the latest electronic technology, and they incorporate our long experience as a specialist manufacturer of audio equipment. We are confident that you will find satisfaction in the high quality sound and top performance, and that you will find pleasure in the functional beauty achieved through human-engineering concept. Before starting operation, please read this instruction manual thoroughly and acquaint yourself with the proper mode of using the unit and all its connections.

We hope you will enjoy top-notch performance for many years to come.

BEFORE ENJOYMENT/ POWER SUPPLY

Follow the instructions below for maximum safety:

1. Use a wall outlet for power supply

Be sure to connect the AC line cord directly to a household wall outlet, and not to an auxiliary outlet on another component. Be certain that the outlet voltage matches the electrical rating of the unit, found on the rear panel name plate.

2. Connecting and removing AC cord

Be sure to connect or disconnect the AC line cord only after turning off the power switch to prevent possible shock noise or damage to the speakers.

3. Furnished convenience AC outlet

(Not available for U.K., Scandinavia and some other countries)

a) Do not insert or remove plug from any convenience AC outlet supplied on the appliance while the appliance is connected to power.

Also do not insert foreign object, other than a proper plug, into the convenience AC outlet.

b) Do not connect other appliance(s) to convenience AC outlet if its/their total power consumption exceeds maximum rated watts labeled next to the outlet.

4. Ventilate the unit well

Never block any ventilation holes at the top and bottom of the unit. Be sure also to provide ample ventilation space around the unit. Poor ventilation may result in damage due to excessive heat.

5. Do not open the cabinet

In order to avoid electric shock or damage to the component, never open the cabinet. If a foreign object falls inside the unit by mistake, turn the power off, disconnect the wall plug, and consult a qualified electrician or your dealer.

6. Turn the volume control initially to minimum.

When lowering the tonearm of your turntable onto a record, an excess of current in the lower frequency range may cause damage to the speakers. To prevent this, always minimize the volume setting initially.

7. Moving the unit

When transporting, remove the AC cord from the wall outlet and all other connected cords on the rear panel to prevent wire breakage and short circuits.

8. If the unit gets wet

If the unit should get wet, immediately disconnect the AC cord, and consult your dealer or a qualified electrician.

9. Cleaning and maintenance

Do not use chemicals such as benzine or thinners on the front panel. Always use a soft, dry cloth to clean the unit.

10. Retain the owner's manual

Retain the owner's manual near the unit, and write down the serial number (found on the rear panel) on the cover.

EXCLUSIVE NOTE FOR U.K.

If your unit comes with a 2-core cable without a plug, make certain live and neutral leads are connected to the proper terminals. Check that the terminals are screwed down firmly and no loose strands of wire are present.

IMPORTANT: The wires in this mains lead are coloured in accordance with the following code:

BLUE:	NEUTRAL
BROWN:	LIVE

As the colours of the wires in the mains lead of this apparatus may not correspond with the coloured markings identifying the terminals in your plug proceed as follows.

The wire which is coloured BLUE must be connected to the terminal which is marked with the letter N or coloured BLUE or BLACK. The wire which is coloured BROWN must be connected to the terminal which is marked with the letter L or coloured BROWN or RED.

INSTALLATION

Be sure to place the unit in a level and flat place where it is free from humidity, vibration, high temperature and not exposed to direct sunlight. Be careful not to place the unit in a highly enclosed place such as near a wall or on a bookshelf. A poor ventilation will cause undesirable effects to the unit.

SPEAKERS

Be sure to use only speakers rated at 4 – 16 ohms. The unit will accept two pairs of speaker systems, but if the two systems are to be driven at a time, each speaker should be rated at 8 – 16 ohms. The speaker impedance may be found on its name plate or the instruction manual of the speaker.

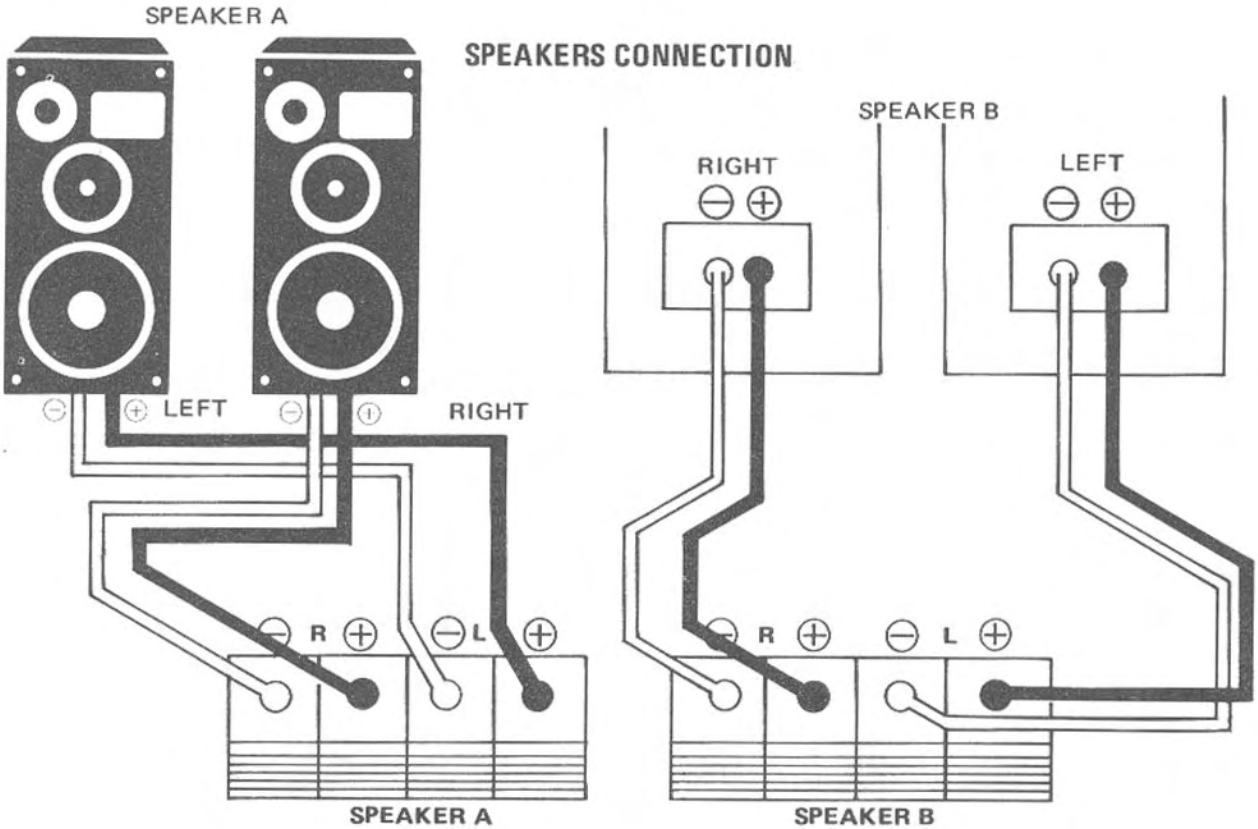

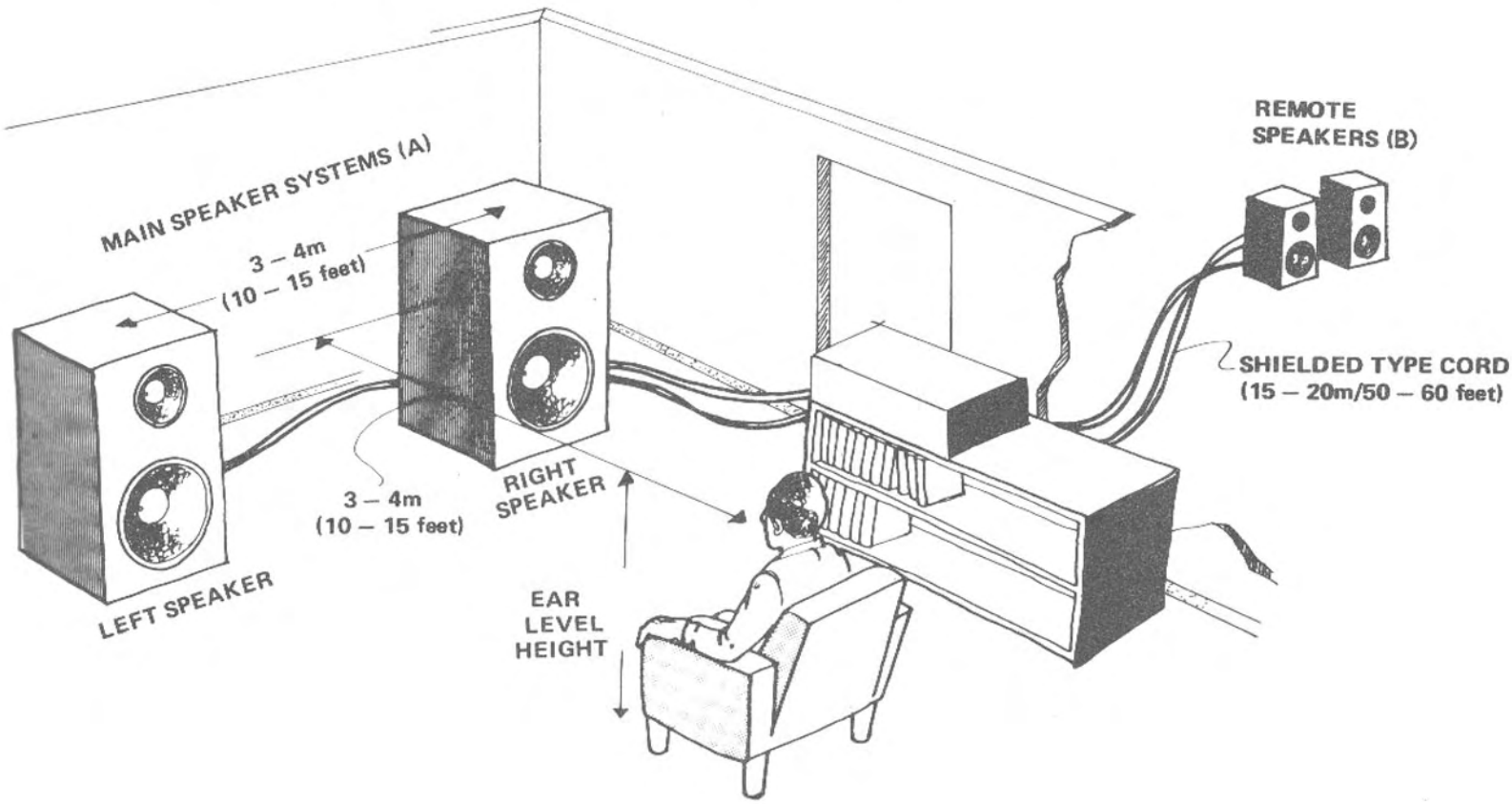

CONNECTING COMPONENTS

Connect all necessary audio components to the rear panel of the unit, using RCA cords or DIN type record/playback cord.

When connecting RCA pin cords, be sure that L and R markings on each component are matched correctly. Connect the grounding wire of the turntable to the terminal marked GND on the amplifier. Be sure to insert pin plug or DIN plug all the way into the jack to insure perfect connection.

ANTENNA INSTALLATION AND CONNECTION

■ FM ANTENNA

Proper installation of antenna is the key to smooth signal reception. To install the attached T-shape indoor atenna, stretch it taut and secure horizontally along a wall or the like in a location where signal reception is optimal. Securely connect the antenna to FM antenna terminals marked "300Ω" on the rear panel. If outdoor type FM antenna is installed, the T-shape antenna is not necessary.

1. Be sure to select the most appropriate type of antenna for the

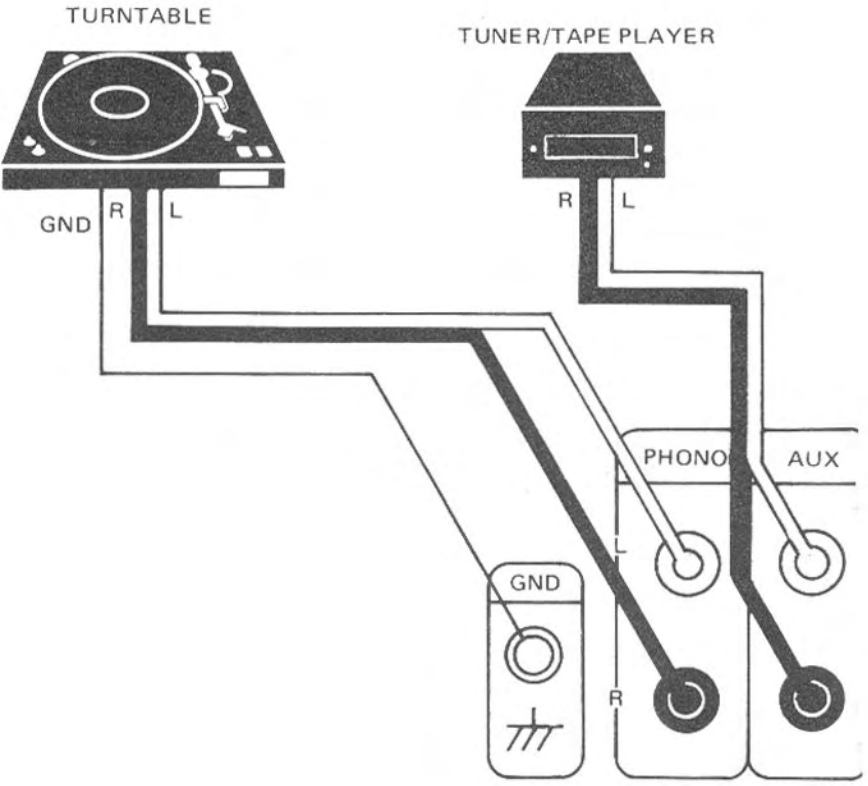

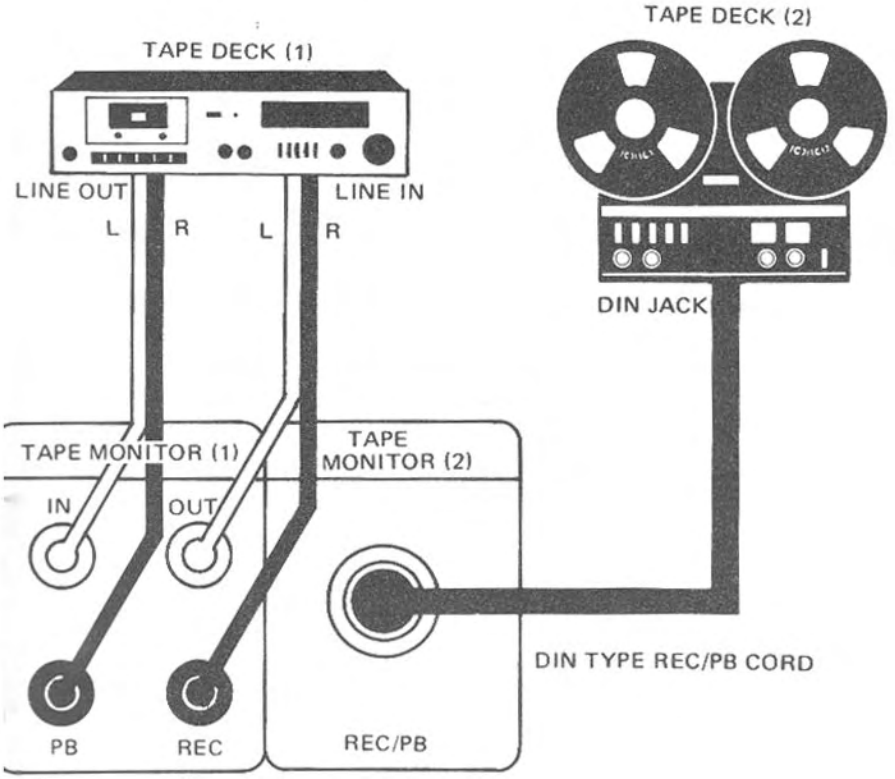

signal reception conditions in your area.

2. A 75-ohm coaxial cable is recommended in connecting the antenna to the unit.

3. Set the antenna in a position as high as possible if buildings, mountains or other obstructions nearby affect reception.

4. Connect the 75-ohm coaxial cable to the antenna terminals located on the rear panel, as shown in the figure.

■ AM ANTENNA

Erect the AM ferrite bar antenna provided on the rear panel. If you install outdoor AM antenna, connect the antenna lead wire to the antenna termi nal marked "AM."

FM ANTENNA INSTALLATION
(When using the auxiliary T-shape FM antenna)

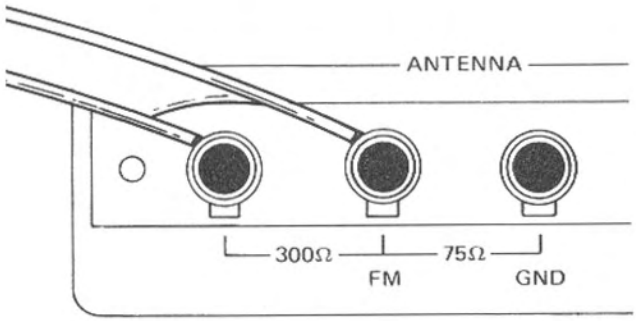

EXCLUSIVE NOTES FOR THE U.S.A.

Outdoor Antenna Grounding

If an outside antenna is connected to the receiver/tuner, be sure the antenna system is grounded so as to provide some protection against voltage surges and built up static charges. Section 810 of the National Electrical Code, ANSI/NFPA No. 70–1978, provides information with respect to proper grounding of the mast and supporting structure, grounding of the lead-in wire to an antenna discharge unit, size of grounding conductors, location of antenna-discharge unit, connection to grounding electrodes, and requirements for the grounding electrode. See figure below.

a. Use No. 10 AWG copper or No. 8 AWG aluminum or No. 17 AWG copper-clad steel or bronze wire, or larger as ground wires for both mast and lead-in.

b. Secure lead-in wire from antenna to antenna discharge unit and mast ground wire to house with stand-off insulators, spaced from 4 feet (1.22 meters) to 6 feet (1.83 meters) apart.

c. Mount antenna discharge unit as closely as possible to where lead-in enters house.

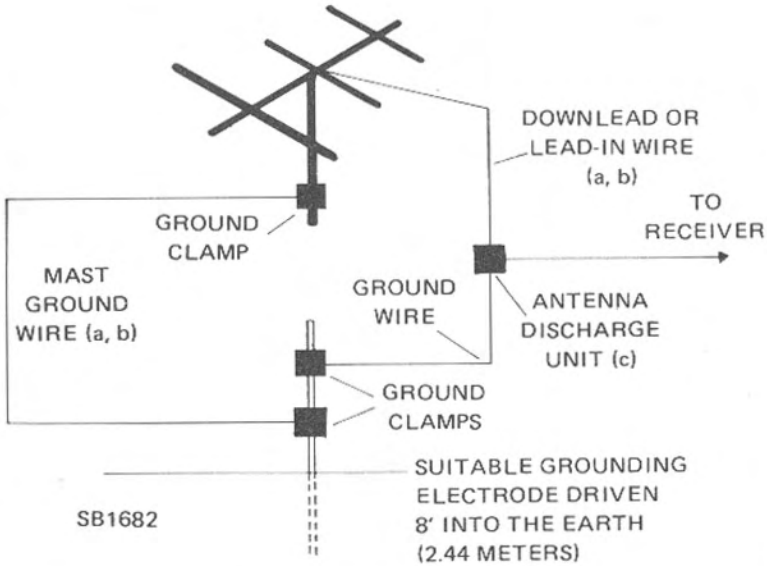

FM ANTENNA INSTALLATION
(When using the outdoor FM antenna)

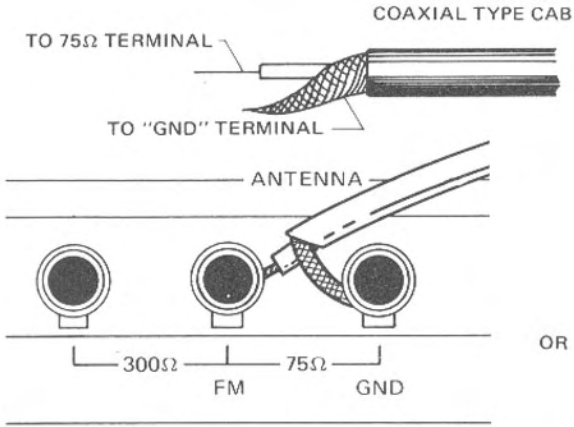

OR

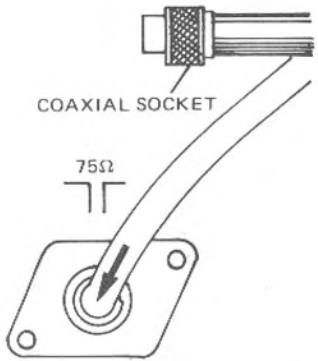

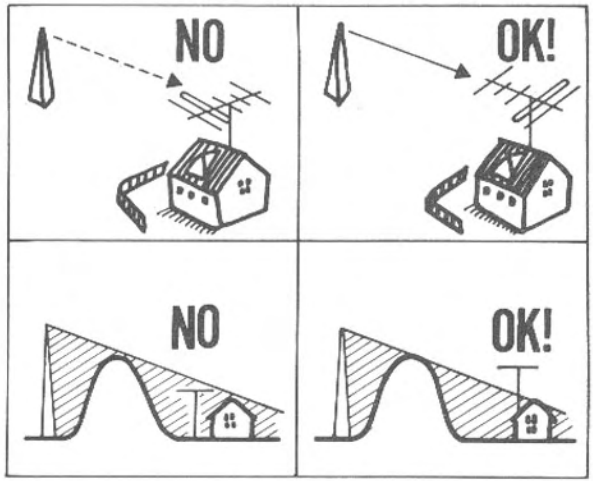

USING THE BUILT-IN AM ANTENNA
(On the rear panel)

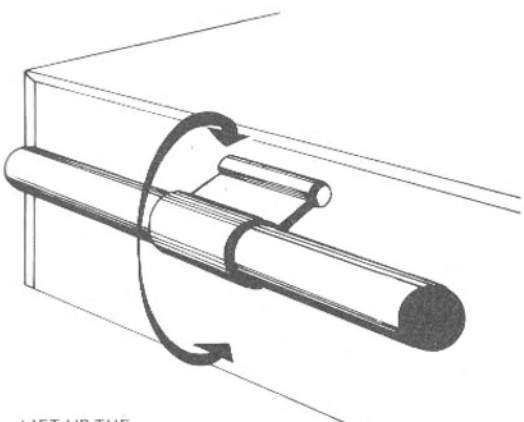

USING THE OUTDOOR AM ANTENNA

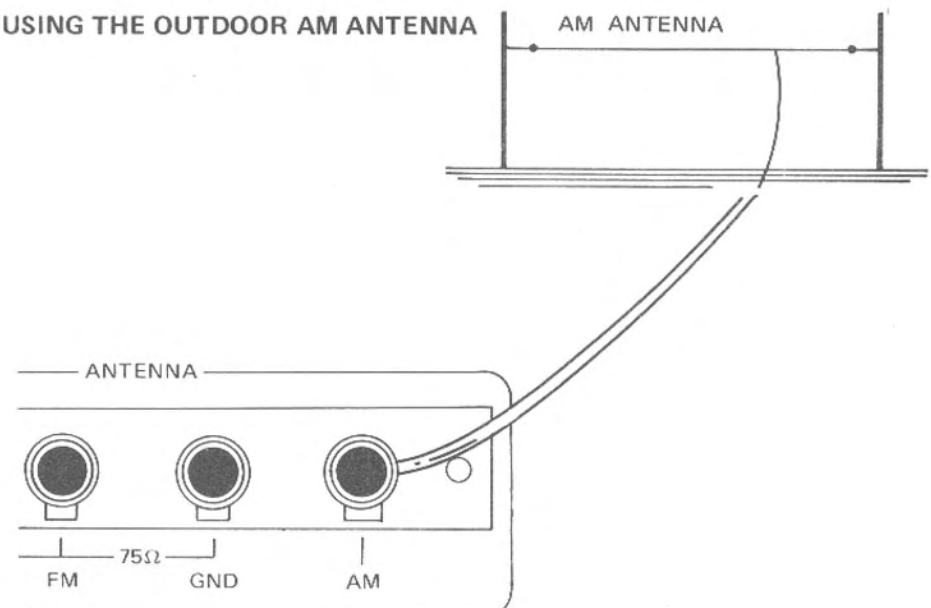

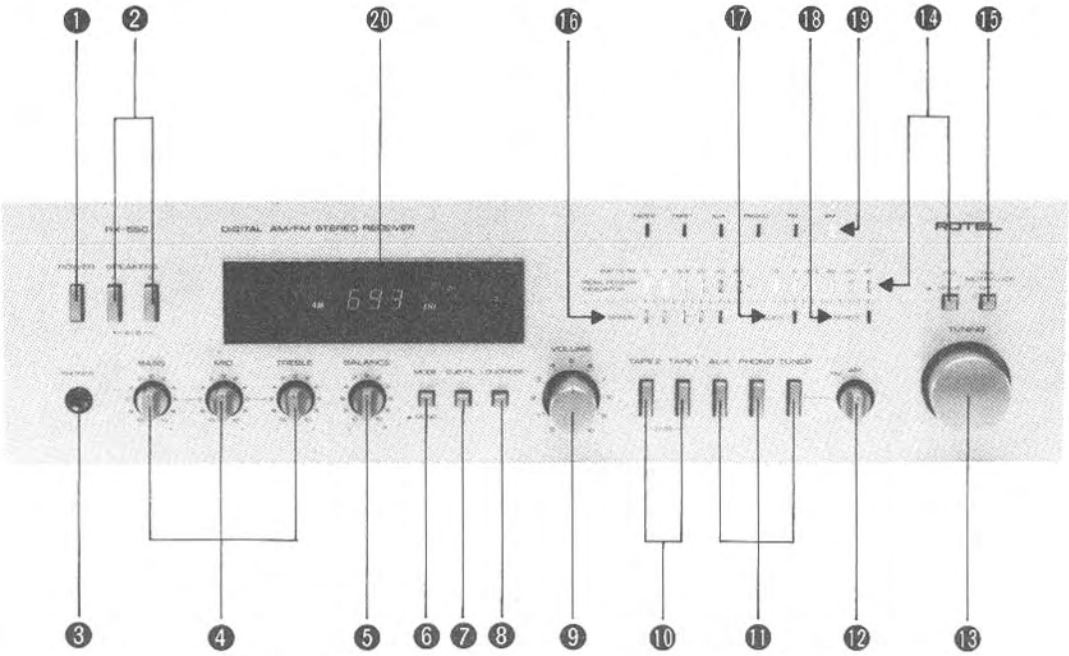

SWITCHES AND CONTROLS

(1) Power Button

Depress this button to turn on power. The frequency display will light up. Release the button to turn off and cut the power supply.

(2) Speaker Button (A/B)

You can select the speaker system(s) you wish to use by means of buttons A and B. Depress button A to activate the speaker system connected to terminals A on the rear panel and button B for the system connected to terminals B. Depressing both A and B buttons will activate both speaker systems.

(3) Headphones Jack

Plug your headphones into this jack for private listening. When using headphones, both A and B speaker buttons should be in the released (OFF) position. The volume of the headphone sound can be controlled with the volume control.

(4) Tone Controls

Three separate tone controls regulate bass, mid-range, and treble, respectively: the knob marked BASS is for low frequency range; that marked MID is for mid-frequency range; and TREBLE for high frequency range. Clockwise rotation increases the response, and counterclockwise rotation decreases it. Coordinated, effective use of those controls will achieve the sound you like best.

(5) Balance Control

This knob regulates the relative sound outputs from each channel. At the mid-position, the level of sound from both speaker systems will be the same. Turning it to the right will cause the volume level of the left speaker relative to the right speaker to decrease, and vice versa. Adjust the setting of the control according to your listening position.

(6) Mode Button

Depress this button to put the unit into the mono mode, to be able to listen to any source monaurally. Leave the button in released position (OFF) during normal FM stereo reception.

(7) SUBSONIC FILTER Button

Used to cut certain unwanted noise without affecting sound quality. The approximate range of sound audible to the human ear is between 20Hz and 20kHz. But undesirable sound waves beyond that range can disturb clear reproduction.

Depressing SUB FIL button cuts frequencies below 15Hz at −12dB/octave, effectively reducing disturbing subsonic effects, such as the residual turntable rumble or shock produced when the stylus is lowered onto a record.

(8) LOUDNESS Button

This button is used when listening at decreased volume levels, to help overcome the human ear's loss of sensitivity to low and high frequencies. Using this button boosts bass and treble frequencies, to provide natural sound quality.

(9) Volume Control

This large knob is used to adjust the volume level. No sound is produced when it is turned fully counterclockwise. Rotating the knob clockwise will cause the volume level to increase. Be sure to set the volume level to minimum when lowering the tonearm onto a record or switching audio sources.

(10) Tape Monitor Buttons

These buttons allow you to listen to the sound from tape deck. Depress TAPE 1 button to play back the tape deck connected to TAPE 1 terminal and TAPE 2 button for the deck connected to TAPE 2 terminal. Dubbing from TAPE 1 to TAPE 2 is possible: Depressing both TAPE 1 and TAPE 2 buttons will feed signals from TAPE 1 to TAPE 2.

(11) Function Selector

The function selector works only when the tape monitor buttons are released (OFF). It is used to listen to program sources on FM, AM, PHONO or AUX. Depress TUNER button to listen to radio broadcasts, and PHONO button to use turntable. Depress AUX button when using equipment connected to AUX terminals.

(12) Band Selector

To tune in radio broadcasts, first depress TUNER button of the function selector (11), and then set the band selector to the desired position.

The band selector on RX-550 contains AM (MW) and FM positions, and that for RX-550L contains FM, MW and LW positions.

(13) Tuning Knob

Tune in to desired station with this knob, consulting the reading on the digital display.

(14) Peak Power Indicator and Indicator Sensitivity Selector

The peak power indicator gives instantaneous, separate display of both left and right channel power output levels. (Calibration is for 8-ohm speakers; the indication is less accurate when using 4-ohm speakers or two speaker systems at once.)

When the indicator sensitivity selector button is depressed, the sensitivity of the peak power indicator is increased by 20dB. Use this button when listening at lower volume levels.

(15) FM Muting + Servo Lock Switch

Releasing this button reduces interstation noise during FM tuning, and it activates a servo-lock circuit that works to maintain precise and stable tuning free from frequency drift.

The muting and servo-lock function is deactivated when this button is depressed. Press the button when tuning in to a station whose incoming signal is very weak. Leave the button released for normal FM tuning and reception.

(16) Signal Strength Indicator

The 5 LEDs show incoming signal strength; the greater the number of glowing LEDs, the better the receiving condition.

(17) Lock Indicator

The lock indicator glows when a station is tuned in and locked.

(18) STEREO Indicator

Glows when FM stereo station is tuned in. Note that when stereo signal is very weak, the unit may reproduce the program only monaurally. In that case, the indicator will not be illuminated, despite being tuned to a stereo program.

(19) Monitor/Function Indicator

This gives visual indication of the program source selected by button (10) or (11). (On the RX-550L, 'AM' indicator glows when the band selector is set at either LW or MW.)

(20) Frequency Display

This display shows the receiving frequency, simultaneously denoting the band selected. (On the RX-550L, 'AM' is indicated when either MW or LW is selected on the band selector.)

OPERATION

Checking before Operation

- Check the power supply connection.
- Check the connections to the turntable and tape deck.
- Check the connection to and position of the antenna.
- Be sure to set the volume control to minimum before turning on the unit.
- Select the desired speaker system by depressing the speaker button(s). Keep both speaker buttons in the released (OFF) condition when you are listening with headphones (plugged into the headphones jack).
- For convenience, FM/MUTING/LOCK button should be left in released (ON) position to keep the servo-lock function activated throughout normal FM reception.

A. Playing the Turntable

1. Set tape monitor buttons, TAPE 1 and TAPE 2 to OFF.
2. Depress the PHONO button of the function selector.
3. Turn on the unit and the turntable.
4. Operate the turntable according to the instructions provided with it.
5. Raise the volume to the desired level.

B. FM Signal Reception

1. Set tape monitor buttons, TAPE 1 and TAPE 2 to OFF.
2. Depress TUNER button of the function selector, and set the band selector to FM.
3. Turn on power.
4. Rotate the tuning knob to obtain desired frequency on the frequency display. Then fine-adjust with the tuning knob so that the LOCK indicator turns on. Also use the signal indicator in tuning.
5. Raise the volume to desired level.

The servo lock function allows low-distortion FM reception with a tuning accuracy of ±5kHz at center-of-channel. When the frequency reaches a point close to optimal tuning, the servo-lock circuit pulls in the signal to the correct tuning point (±5kHz) and locks onto it, causing the LOCK indicator to glow. Once the LOCK indicator is turned on, the servo-lock circuit maintains optimal tuning.

C. AM Signal Reception

1. Set tape monitor buttons, TAPE 1 and TAPE 2 to OFF.
2. Depress TUNER button of the function selector, then set the band selector to desired position.
3. Turn on the unit.
4. Rotate the tuning knob to obtain desired frequency on the frequency display. Perform fine adjustment so that the signal indicator shows the maximum reading.

D. Operating the Tape Deck

1. Depress the tape monitor button, TAPE 1 or TAPE 2, according to which deck is connected.
2. Turn on the unit and the tape deck.
3. Operate the tape deck according to the instructions provided with it.
4. Raise the volume to desired level.

E. Recording

When listening to a program source according to the instructions given above (A, B and C), output signals will appear at the TAPE MONITOR OUT and DIN terminals on the rear panel. To record the signals from the program source, simply set the connected tape deck to the recording mode. If your tape deck is a three-head type, you can monitor the recorded signal by depressing the corresponding tape monitor button. Since the signals for recording are not affected by the setting of the volume, tone or other controls, you may set them as desired during recording.

PROTECTION CIRCUIT

To prevent accidental damage to the unit or speakers, a protection circuit is installed in the unit. If the unit suddenly stops operating, a blown fuse may be the cause. Accordingly, carry out the following check.

1. Turn off the unit.
2. Open the fuse box on the rear panel and check the two fuses: one is for the left channel and the other for the right channel circuit.
3. The blown fuse may be due to a short-circuited speaker cable or an overload resulting from the use of a low impedance speaker. Check the speaker cable, its connection and speaker impedance. Correct the cause of the trouble if any.
4. Replace the blown fuse with a new one and close the fuse box. If the fuse blows again despite taking the above action, cut off the power supply from your entire audio system and consult your dealer of a qualified electrician.

HUM AND NOISE

Hum often accompanies activation of power supply. If hum is generated, try replugging the power cord into the wall outlet, reversing the plug this time.* Other possible causes of hum include improper positioning of connecting cords (try changing cord position), or incorrect pin-plug insertion. Check all connections if hum persists. If noise is introduced, it is usually caused by improper positioning of antenna cable or improper antenna installation. Use a 75-ohm cable for outdoor FM antenna and minimize multipath to obtain optimal signal reception. Note that during signal reception the unit may pick up noise from other household electric appliances (as when switching power on or off). In that case, check the relative location of the appliances and keep them away from the unit, or vice versa, as necessary.

Note 1: In a location near a broadcasting station, very strong signals may cause noise or distortion, depending on the type of antenna used. In that case, install an attenuator between the antenna and the tuner.

Note 2: Inside a concrete building, FM signals are weakened and satisfactory reception may be difficult. An outdoor FM antenna is a definite help in such case.

*Not available for U.K.

VOLTAGE SELECTION

Not available for U.K., Canada and Scandinavia

The unit is a variable voltage equipment that can run on 120V, 220V or 240V power supply. Your unit should already be preset at the proper voltage for use in your area. However, if you move to an area where the power supply voltage is different, the voltage setting can be manually changed. BE SURE THAT YOUR UNIT IS NOT CONNECTED TO THE POWER SOURCE BEFORE ATTEMPTING TO MAKE THIS CHANGE. To check the voltage setting, remove the name plate on the rear panel and locate the VOLTAGE SELECTOR. Use a screwdriver to turn the voltage selector to the required voltage.

Not available for U.K., Canada and Scandinavia

SPECIFICATIONS

AMPLIFIER SECTION

Continuous Power Output	40 watts* per channel, min. RMS 8 ohms from 20 to 20,000Hz with no more than 0.08% total harmonic distortion.
Total Harmonic Distortion	No more than 0.08% (continuous power output) No more than 0.06% (1 watt per channel power output)
Intermodulation Distortion (60Hz : 7kHz = 4 : 1)	No more than 0.08% (continuous rated power output) No more than 0.06% (1 watt per channel power output)
Damping Factor	35 (20 to 20,000Hz, 8 ohms)
Input Sensitivity/Impedance:	
PHONO	2.5mV/47 kohms
TAPE	150mV/35 kohms
Overload Level (1kHz, 0.1% THD):	
PHONO	160mV
TAPE	Not less than 5V
Phono Equalization	±0.3dB (30 to 15,000Hz)
Hum and Noise (IHF A network):	
PHONO	80dB
TUNER/AUX	90dB
TAPE IN	90dB
Tone Control:	
Bass	±10dB (50Hz)
Midrange	±10dB (1kHz)
Treble	±8dB (15kHz)
Subsonic Filter	12dB/Oct. (16Hz)
Loudness Contour (Volume control set at −40dB position)	+8.5dB (100Hz), +3.0dB (10kHz)

FM TUNER SECTION

Usable Sensitivity (mono)	10.3dBf (1.8μV)
50dB Quieting Sensitivity:	
Mono	15.2dBf (3.2μV)
Stereo	36.0dBf (35μV)
Signal to Noise Ratio (at 65dBf):	
Mono	78dB
Stereo	70dB
Distortion (at 65dBf):	
100Hz	0.1% (mono), 0.2% (stereo)
1kHz	0.1% (mono), 0.2% (stereo)
6kHz	0.2% (mono), 0.3% (stereo)
Frequency Response	30 to 15,000Hz +0.3dB, −2.5dB
Capture Ratio	1.5dB
Alternate Channel Selectivity	55dB
Spurious Response Ratio	70dB
Image Response Ratio	50dB
IF Response Ratio	80dB
AM Suppression Ratio	60dB
Muting Threshold	14.7dBf
Stereo Separation	45dB (1kHz), 35dB (30 to 15,000Hz)
Subcarrier Product Ratio	50dB
SCA Rejection Ratio	60dB
Antenna Input	300 ohms balanced, 75 ohms unbalanced

AM TUNER SECTION

Sensitivity	200μV/m, 600μV/m (LW = RX-500L only)
Selectivity	35dB
Signal to Noise Ratio	50dB
Image Response Ratio	40dB
IF Response Ratio	38dB
Antenna	Built-in ferrite loopstick antenna

MISCELLANEOUS

Power Requirements	120V/60Hz 120/220/240V/50-60Hz
Power Consumption	310 watts
Dimensions (overall)	W 430mm/16-15/16" H 115mm/4-17/32" D 343mm/13-1/2"
Weight (net)	8.4kg/18.48 lbs.

*Measured pursuant to the Federal Trade Commission's Trade Regulation Rule on Power Claims for Amplifiers (applicable to the U.S.A. only).

Note: Specifications and design subject to possible modification without prior notice.