owner's manual

Quality. Uncompromised

ROTEL®

RT-830A

AM/FM STEREO TUNER

RT-830AL

MW/LW/FM STEREO TUNER

ENGLISH 1
DEUTSCH 5
FRANCAIS 8

WARNING
TO PREVENT FIRE OR SHOCK HAZARD, DO NOT EXPOSE THIS APPLIANCE TO RAIN OR MOISTURE

Write your SERIAL NUMBER here.

The number is located near the name plate on the rear panel.

SAFETY INSTRUCTIONS

Warning: To reduce the risk of fire or electric shock, do not expose this appliance to rain or moisture.

CAUTION

RISK OF ELECTRIC SHOCK
DO NOT OPEN

CAUTION: TO REDUCE THE RISK OF ELECTRIC SHOCK,
DO NOT REMOVE COVER (OR BACK)
NO USER SERVICEABLE PARTS INSIDE
REFER SERVICING TO QUALIFIED SERVICE PERSONNEL

The lighting flash with arrowhead symbol, within an equilateral triangle, is intended to alert the user to the presence of uninsulated "dangerous voltage" within the product's enclosure that may be of sufficient magnitude to constitute a risk of electric shock to persons.

The exclamation point within an equilateral triangle is intended to alert the user to the presence of important operating and maintenance (servicing) instructions in the literature accompanying the appliance.

"Note to CATV system installer:
This reminder is provided to call the CATV system installer's attention to Article 820-22 of the NEC that provides guidelines for proper grounding and, in particular, specifies that the cable ground shall be connected to the grounding system of the building, as close to the point of cable entry as practical."

1. **Read Instructions** — All the safety and operating instructions should be read before the appliance is operated.
2. **Retain Instructions** — The safety and operating instructions should be retained for future reference.
3. **Heed Warnings** — All warnings on the appliance and in the operating instructions should be adhered to.
4. **Follow Instructions** — All operating and use instructions should be followed.
5. **Water and Moisture** — The appliance should not be used near water — for example, near a bathtub, washbowl, kitchen sink, laundry tub, in a wet basement, or near a swimming pool, and the like.
6. **Carts and Stands** — The appliance should be used only with a cart or stand that is recommended by the manufacturer.
7. **Wall or Ceiling Mounting** — The appliance should be mounted to a wall or ceiling only as recommended by the manufacturer.
8. **Ventilation** — The appliance should be situated so that its location or position does not interfere with its proper ventilation. For example, the appliance should not be situated on a bed, sofa, rug, or similar surface that may block the ventilation openings; or, placed in a built-in installation, such as a bookcase or cabinet that may impede the flow of air through the ventilation openings.
9. **Heat** — The appliance should be situated away from heat sources such as radiators, heat registers, stoves, or other appliances (including amplifiers) that produce heat.
10. **Power Sources** — The appliance should be connected to a power supply only of the type described in the operating instructions or as marked on the appliance.
11. **Grounding or Polarization** — The precautions that should be taken so that the grounding or polarization means of an appliance is not defeated.
12. **Power-Cord Protection** — Power-supply cords should be routed so that they are not likely to be walked on or pinched by items placed upon or against them, paying particular attention to cords at plugs, convenience receptacles, and the point where they exit from the appliance.
13. **Cleaning** — The appliance should be cleaned only as recommended by the manufacturer.
14. **Nonuse Periods** — The power cord of the appliance should be unplugged from the outlet when left unused for a long period of time.
15. **Object and Liquid Entry** — Care should be taken so that objects do not fall and liquids are not spilled into the enclosure through openings.
16. **Damage Requiring Service** — The appliance should be serviced by qualified service personnel when:
    A. The power-supply cord or the plug has been damaged; or
    B. Objects have fallen, or liquid has been spilled into the appliance; or
    C. The appliance has been exposed to rain; or
    D. The appliance does not appear to operate normally or exhibits a marked change in performance; or
    E. The appliance has been dropped, or the enclosure damaged.
17. **Servicing** — The user should not attempt to service the appliance beyond that described in the operating instructions. All other servicing should be referred to qualified service personnel.

Power Lines — An outdoor antenna should be located away from power lines.

Outdoor Antenna Grounding — If an outside antenna is connected to the receiver, be sure the antenna system is grounded so as to provide some protection against voltage surges and built up static charges. Section 810 of the National Electrical Code, ANSI/NFPA No. 70—1984, provides information with respect to proper grounding of the mast and supporting structure, grounding of the lead-in wire to an antenna discharge unit, size of grounding conductors, location of antenna-discharge unit, connection to grounding electrodes, and requirements for the grounding electrode. See Figure.

[a]Use No. 10 AWG (5.3 mm²) copper, No. 8 AWG (8.4 mm²) aluminum, No. 17 AWG (1.0 mm²) copper-clad steel or bronze wire, or larger, as a ground wire.

[b]Secure antenna lead-in and ground wires to house with stand-off insulators spaced from 4—6 feet (1.22—1.83 m) apart.

[c]Mount antenna discharge unit as close as possible to where lead-in enters house.

FIGURE
EXAMPLE OF ANTENNA GROUNDING AS PER NATIONAL ELECTRICAL CODE INSTRUCTIONS CONTAINED IN ARTICLE 810 RADIO AND TELEVISION EQUIPMENT

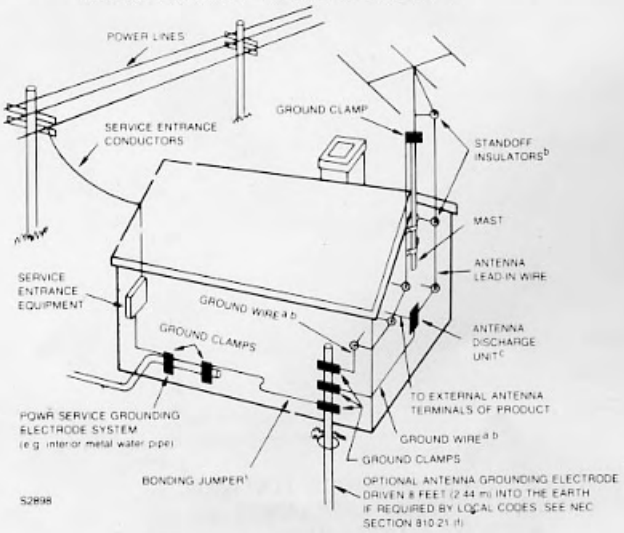

[d]Use jumper wire not smaller than No. 6 AWG (13.3 mm²) copper, or the equivalent, when a separate antenna-grounding electrode is used. See NEC Section 810-21 (j).

ENGLISH

AM/FM STEREO TUNER RT-830A
MW/LW/FM STEREO TUNER RT-830AL

INTRODUCTION

We at Rotel want to thank you for purchasing our audio product.
Rotel audio products are designed to use the latest electronic technology, and they incorporate our long experience as a specialist manufacturer of audio equipment. We are confident that you will find satisfaction in the high quality sound and top performance, and that you will find pleasure in the functional beauty achieved through human-engineering concept. Before starting operation, please read this instruction manual thoroughly and acquaint yourself with the proper mode of using the unit and all its connections.
We hope you will enjoy top-notch performance for many years to come.

INSTALLATION

Be sure to place the unit in a level and flat place where it is free from humidity, vibration, high temperature and not exposed to direct sunlight. Be careful not to place the unit in a highly enclosed place such as near a wall or on a bookshelf. A poor ventilation will cause undesirable effects to the unit.

POWER SUPPLY CONNECTION

For power the unit requires the normal house electrical current (AC). You may simply plug the unit into a wall outlet, or into your amplifier's convenience AC outlet.
CAUTION: Do not apply power without first making sure the proper connections are completed. If you live in U.K. and your unit comes with 2-core cord without a plug, be sure to read the exclusive caution for U.K.

EXCLUSIVE NOTE FOR U.K.

If your unit comes with a 2-core cable without a plug, make certain live and neutral leads are connected to the proper terminals. Check that the termnals are screwed down firmly and no loose strands of wire are present.
IMPORTANT: The wires in this mains lead are cloured in accordance with the following code;
BLUE: NEUTRAL
BROWN: LIVE
As the colours of the wires in the mains lead of this apparatus may not correspond with the coloured markings identifying the terminals in your plug proceed as follows. the wire which is coloured BLUE must be connected to the terminal which is marked with the letter N or coloured BLUE OR BLACK.
The wire which is coloured BROWN must be connected to the terminal which is marked with the letter L or coloured BROWN or RED.

CAUTION:

To prevent electric shock do not use this (polarized) plug with an extension cord, receptacle or other outlet unless the blades can be fully inserted to prevent blade exposure.

CONNECTION TO INTEGRATED AMPLIFIER

Using RCA pin cords, securely connect the OUTPUT terminals on the rear panel of the unit to the TUNER (or AUX) terminals of amplifier. Make absolutely sure that RIGHT terminal of one unit is connected to the RIGHT terminal of the other, and LEFT to LEFT.

AMPLIFIER

RT-830A

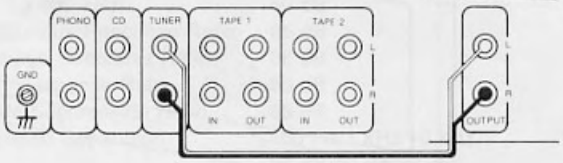

ANTENNA INSTALLATION AND CONNECTION

■ FM Antenna

Proper installation of antenna is the key to smooth signal reception. To install the attached T-shape indoor antenna, stretch it taut and secure horizontally along a wall or the like in a location where signal reception is optimal. Securely connect the antenna to FM antenna terminals marked "300Ω" on the rear panel. If outdoor type FM antenna is installed, the T-shape antenna is not necessary. For proper use of your outdoor FM antenna, follow the instructions below.

1. Be sure to select the most appropriate type of antenna for the signal reception conditions in your area.
2. A 75-ohm coaxial cable is recommended in connecting the antenna to the unit.
3. Set the antenna in a position as high as possible if buildings, mountains or other obstructions nearby affect reception.
4. The 75-ohm coaxial antenna cable should be properly hooked up to the designated antenna terminals on the rear panel: Locate the terminals labeled "75Ω".

300Ω Antenna

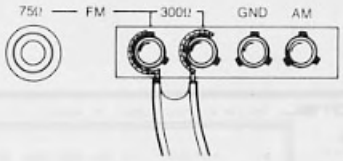

75Ω Coaxial Antenna

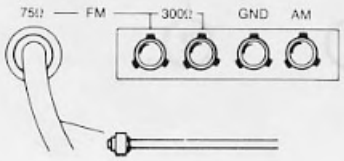

■ **AM Antenna**

The loop antenna is provided for optimum AM reception. Attach the loop antenna onto the antenna holder on the rear panel, and connect the lead wires to the antenna screw terminals marked "G" and "AM". If an outdoor antenna is desired for better reception due to difficult reception area, connect such antenna to the same screw terminals as the loop antenna. Please note that the loop antenna should be left connected to the terminals even when the external antenna connected.

AM Loop Antenna

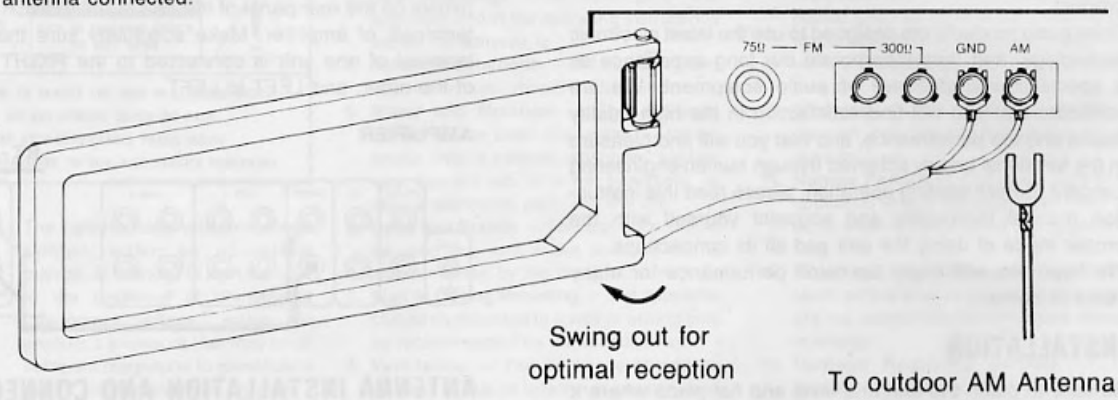

SWITCHES AND CONTROLS

(1) Power Button

This button turns on the unit. The LED indicator above it will glow when the power is on. Press the button a second time to turn off the power.

> **CAUTION**
> As long as the power cord is plugged into an AC outlet, power is supplied to the unit regardless of the setting of the Power Button.

(2) Dial Scale

The dial pointer LED indicates tuning frequency.

(3) Stereo Indicator

Glows when stereo broadcasting signal is tuned in. Note that when stereo signal is very weak, the unit will not give stereo reproduction, and the indicator will not light up.

(4) Signal Strength Indicator

The 5 LEDs show incoming signal strength; the receiving condition is optimal when all 5 LEDs are illuminated.

(5) AM/FM Selector

Push to either AM or FM position depending of which broadcasting you wish to listen. (In case of FM/MW/LW version model, push LW/MW button to select either LW or MW broadcasting.)

(6) FM Mute Off/Mono Button

When this button is pressed to ON, any FM broadcast is received monaurally. Be sure to leave the button in the released (OFF) position during normal stereo FM reception. In the OFF position, interstation noise generated when tuning in an FM station will be reduced.

(7) AM Filter Button

Push this button in to activate the filter to cut off high frequencies in case of background noises like hiss preventing a good AM reception.

(8) Tuning Knob

Used to tune in to a desired station. Rotate the knob to the right to tune for higher frequencies, and to the left for lower frequencies.

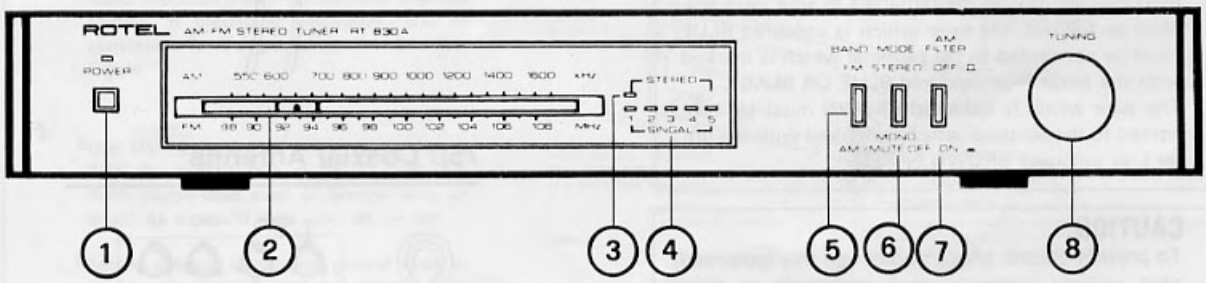

OPERATION

• Before commencing operation, check to make sure all antenna, amplifier and power connections are properly made.

1. Set the volume control on the amplifier to minimum position, and amplifier function switch to TUNER position (or to AUX position if the tuner is connected to AUX terminal).
2. Turn on the amplifier and press the Power button on the tuner.
3. Depress FM or AM button of the tuner function selector. On RT-830AL, select among FM, MW, and LW buttons.
4. Tune in to the desired station by means of tuning knob.
5. Raise the volume to the desired level, and enjoy listening.

HUM AND NOISE

Hum often accompanies activation of power supply. If hum is generated, try replugging the power cord into the wall outlet, reversing the plug this time. Other possible causes of hum include improper routing of connecting cords (try changing cord position), or incorrect pin-plug insertion. Check all connections if hum persists.

If noise is introduced, it is usually caused by improper positioning of antenna cable or improper antenna installation. Use a 75-ohm cable for outdoor FM antenna and minimize multipath to obtain optimal signal reception. Note that during signal reception the unit may pick up noise from other household electric appliances (as when switching power on or off). In that case, check the relative location of the appliances and keep them away from the unit, or vice versa, as necessary.

Note 1: In a location near a broadcasting station, very strong signals may cause noise or distortion, depending on the type of antenna used. In that case, install an attenuator between the antenna and the tuner.

Note 2: Inside a concrete building, FM signals are weakened and satisfactory reception may be difficult. An outdoor FM antenna will best remedy such a situation.

VOLTAGE SELECTION

Not available for U.K., Canada and Scandinavia

The unit is a variable voltage equipment that can run on 120V, 220V or 240V power supply. Your unit should already be preset at the proper voltage for use in your area. However, if you move to an area where the power supply voltage is different, consult your dealer.

SPECIFICATIONS

FM TUNER SECTION

Usable Sensitivity (mono)	1.8 dBf/1.9 μV (300 ohms)
50 dB Quieting Sensitivity:	
Mono	16 dBf/3.5 μV
Stereo	39.4 dBf/50 μV
Signal-to-Noise Ratio (15 65 dBf):	
Mono	75 dB
Stereo	70 dB
Harmonic Distortion (at 65 dBf):	
1 kHz	0.08% (mono), 0.3% (stereo)
Frequency Response	35 to 15,000 Hz, +1.5 dB, −1.5 dB
Capture Ratio	1.5 dB
Alternate Channel Selectivity (±400 kHz)	60 dB
Spurious Response Ratio	85 dB
Image Response Ratio	55 dB
IF Response Ratio	90 dB
AM Suppression Ratio	55 dB
Stereo Separation	100 Hz/1 kHz/10 kHz, 36 dB/40 dB/32 dB
Subcarrier Product Ratio	65 dB
Antenna Input	300 ohms balanced, 75 ohms unbalanced

AM TUNER SECTION	MW	LW (RT-830AL)
Sensitivity	350 μV/m	750 μV/m
Selectivity	35 dB	35 dB
Signal-to-Noise Ratio	60 dB	60 dB
Image Response Ratio	40 dB	40 dB
IF Response Ratio	40 dB	40 dB
Antenna	Loop antenna	

MISCELLANEOUS

Power Requirement	120V/60 Hz, 220V/50 Hz, 240V/50 Hz or 120, 220, 240V/50-60 Hz (depending on destinations)
Power Consumption	10 watts
Dimensions (overall)	W444 × H66 × D302 mm 17½" × 2 19/32" × 11 29/64"
Weight (net)	3.5 kg

• Specifications and design subject to possible modification without notice.