ROTEL®

STEREO PHONO EQUALIZER

RHQ10

OWNER'S MANUAL

使用説明書

ENGLISH 2
DEUTSCH 10
FRANCAIS 17
日本語 24

WARNING
TO PREVENT FIRE OR SHOCK HAZARD,
DO NOT EXPOSE THIS APPLIANCE
TO RAIN OR MOISTURE

Write your SERIAL NUMBER here.
The number is located near the name plate on the rear panel.

SAFETY INSTRUCTIONS

CAUTION

RISK OF ELECTRIC SHOCK
DO NOT OPEN

CAUTION: TO REDUCE THE RISK OF ELECTRIC SHOCK, DO NOT REMOVE COVER (OR BACK). NO USER-SERVICEABLE PARTS INSIDE. REFER SERVICING TO QUALIFIED SERVICE PERSONNEL.

EXCLUSIVE NOTE FOR U.K.

If your unit comes with a 2-core cable without a plug, make certain live and neutral leads are connected to the proper terminals. Check that the terminals are screwed down firmly and no loose strands of wire are present.

IMPORTANT: The wires in this mains lead are coloured in accordance with the following code:

BLUE: NEUTRAL
BROWN: LIVE

As the colours of the wires in the mains lead of this apparatus may not correspond with the coloured markings identifying the terminals in your plug proceed as follows. The wire which is coloured BLUE must be connected to the terminal which is marked with the letter N or coloured BLUE or BLACK. The wire which is coloured BROWN must be connected to the terminal which is marked with the letter L or colour BROWN or RED.

• Explanation of Graphical Symbols

The lightning flash with arrowhead symbol, within an equilateral triangle, is intended to alert you to the presence of uninsulated "dangerous voltage" within the product's enclosure that may be of sufficient magnitude to constitute a risk of electric shock to persons.

The exclamation point within an equilateral triangle is intended to alert you to the presence of important operating and maintenance (servicing) instructions in the literature accompanying the appliance.

1. Read Instructions — All the safety and operating instructions should be read before the appliance is operated.
2. Retain Instructions — The safety and operating instructions should be retained four for future reference.
3. Head Warnings — All warnings on the appliance and in the operating instructions should be adhered to.
4. Follow Instructions — All operating and other instructions should be followed.
5. Water and Moisture — The appliance should not be used near water — for example, near a bathtub, washbowl, kitchen sink, laundry tub, in a wet basement, or near a swimming pool, etc.
6. Carts and Stands — The appliance should be used only with a cart or stand that is recommended by the manufacturer.

PORTABLE CART WARNING

S3125A

7. Wall or Ceiling Mounting — The appliance should be mounted to a wall or ceiling only as recommended by the manufacturer.
8. Ventilation — The appliance should be situated so that its location or position does not interfere with its proper ventilation. For example, the appliance should not be situated on a bed, sofa, rug, or similar surface that may block the ventilation openings; or placed in a built-in installation, such as a bookcase or cabinet that may impede the flow of air through the ventilation openings.
9. Heat — The appliance should be situated away from heat sources such as radiators, stoves, or other appliances that produce heat.
10. Power Source — The appliance should be connected to a power supply only of the type described in the operating instructions or as marked on the appliance.
11. Power-Cord Protection — Power-supply cords should be routed so that they are not likely to be walked on or pinched by items placed upon or against them, paying particular attention to cords at plugs, convenience receptacles, and the point where they exit from the appliance.
12. Cleaning — The appliance should be cleaned only as recommended by the manufacturer.
13. Nonuse Periods — The power cord of the appliance should be unplugged from the outlet when left unused for a long period of time.
14. Object and Liquid Entry — Care should be taken so that objects do not fall into and liquids not spilled into the inside of the appliance.
15. Damage Requiring Service — The appliance should be serviced by qualified service personnel when:
    A. The power-supply cord or the plug has been damaged; or
    B. Objects have fallen, or liquid has been spilled into the appliance; or
    C. The appliance has been exposed to rain; or
    D. The appliance does not appear to operate normally or exhibits a marked change in performance; or
    E. The appliance has been dropped, or the cabinet damaged.
16. Servicing — The user should not attempt to service the appliance beyond those means described in the operating instructions. All other servicing should be referred to qualified service personnel.
17. Grounding or Polarization — The precautions that should be taken so that the grounding or polarization means of an appliance is not defeated.

Forward

Thank you for purchasing a Rotel high-end product.

This Rotel component has been endowed with years of our dedicated work in audio technologies, the result of countless technical experiments and stringent listening tests during development. That we have devoted so much time in conducting these tests has come about for no other reason than the fact that we at Rotel simply love good music.

In our pursuit of genuine musicality, Rotel has been very stubborn about circuit designs and uncommonly exacting in selection of parts so as not to depart in any way from the basic Rotel philosophy of balanced design and no-nonsense operation. The deciding factors behind the sound reproduced by this component were not determined by high-performance measuring instruments or computers but by human ears with heartful sensitivity. We believe that you, a devoted music lover, will be fully pleased with our rich musical sound that is of a caliber never before experienced in your room.

We are confident that the product will provide you with many years of satisfying entertainment.

NOTE

The design philosophy of this product is different from that of conventional audio components. Because of this, several areas concerning how the product is used and how it is connected require special attention. Before you enjoy the rich musical sound provided by this product, please take some time to familiarize yourself with the contents of this manual to ensure that you will use it effectively and safely.

Prior to Use

For safe use of this component, please adhere to the following cautions:

1. Power Source

Use the AC power for home use. Please plug the RHQ-10 into a wall outlet or into an auxiliary AC outlet provided on another component.

2. Handling the Power Cord

When plugging the power cord into or unplugging it from the AC outlet, be sure that the power switch to the unit is first turned off.

3. Do not attempt to modify or otherwise alter this product.

This component has been adjusted and inspected at the factory before being shipped. Attempts at alterations can cause problems and invite the danger of electrical shocks, jeopardizing the product's safety. Should a need to make adjustments or other operations arise, please consult with the authorized Rotel dealer where you purchased the unit; never open the top cover to the unit on your own.

4. Choosing a Safe Location

Place this component horizontally onto a rack or shelf that is strong enough to support the total weight of the units you plan to place with it. Be sure that this location is free of vibrations, humidity, dust, and away from direct sunlight.

5. Moving the Unit

In the event you want to move this unit, first be sure that the power switch is turned off. Next, disconnect all cords and cables including the power cord. Moving the unit with the power still turned on is dangerous.

6. In the event that water or other foreign matter enters the unit...

Water or other foreign matter entering the unit can cause problems such as shorted circuits which can result in breakdowns or damage. Please ensure that this does not occur. In the event problems of this type do occur, immediately turn off the power switch to the unit, unplug the power cord, and consult the authorized Rotel dealer where you purchased the unit.

7. Owner's manual

Keep this manual in a safe place with your warranty copy. Let it be available to you whenever you need to consult it.

Input Level Settings on the RHQ-10

The RHQ-10 faithfully reproduces the rich musicality of analog records. It is a pure equalizer that brings out the optimum performance of many good records and the records in your collection you treasure. When this unit is shipped from the factory, it is set as follows in order to accommodate most cartridges:

Standard setting

Approx 0.3mV*/100 ohms for MC cartridges

*Consider this setting to support a range of 0.2-0.5mV.

When shipped from the factory, the unit has been preset, with four short pins, for use with MC cartridges, and appropriate standard values have been set for input impedance. (Fig. 1)

If the cartridge you wish to use is an MC type with an input impedance that is significantly different from 0.3mV, or it is an MM type or a high-output MC type, then some changes need to be made inside this unit. In this event, please consult with the authorized Rotel dealer where you purchased this unit.

Figure 1: Condition upon Shipment from Factory

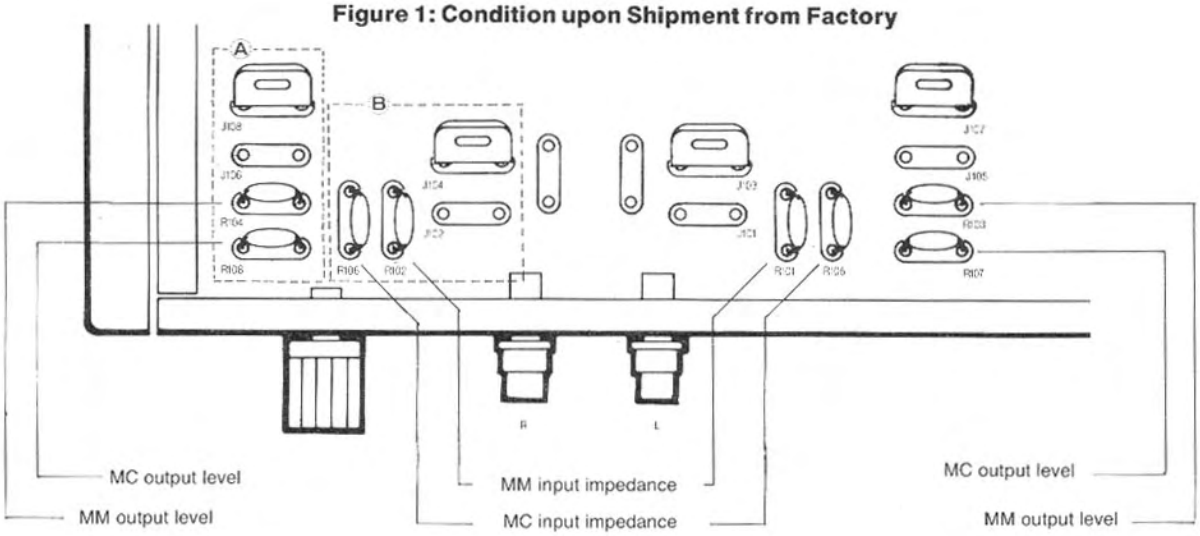

Signal lineages (A) and (B) in the above diagram are detailed in the block diagrams below.

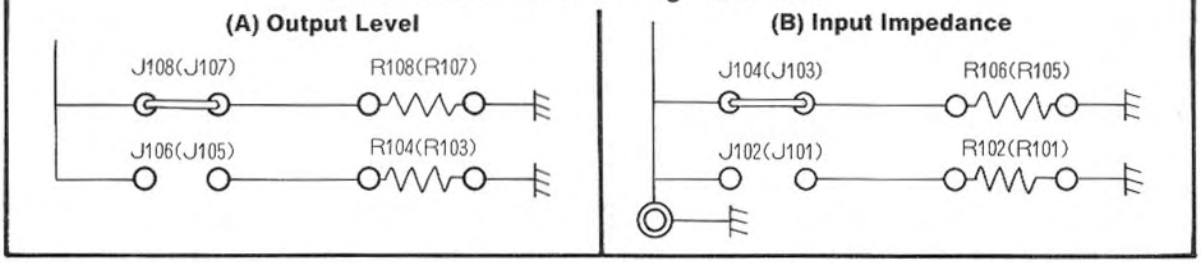

In the event that input impedance for some MC-type cartridges depart considerably from 100 ohms, the resistance values used on PC board points R106 (for the right channel) and R105 (for the left channel) could be replaced with resistance values appropriate for the input impedance of the cartridge you wish to use. A high-quality resistor must be used, and its quality must match that of the resistor in current use. (Fig. 2)

Figure 2

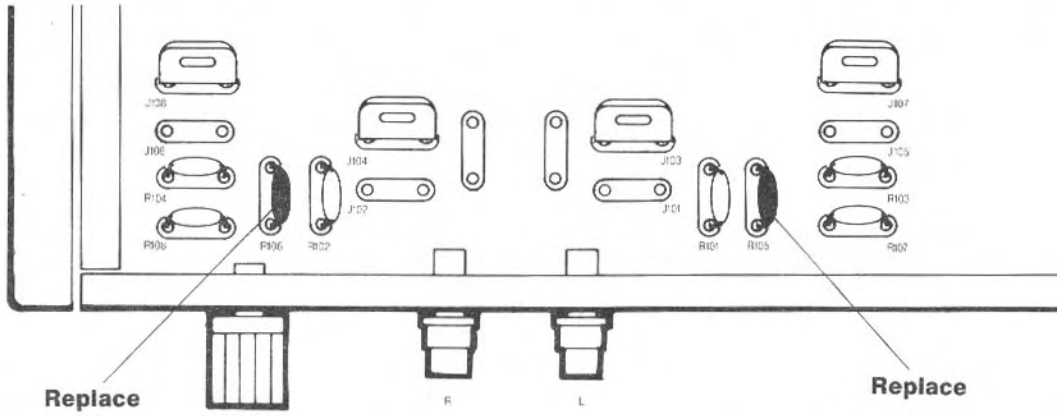

When using an MM cartridge, or an MC cartridge with a high sensitivity similar to that of an MM cartridge, pull out the short pins from PC board points J108 and J104 (for the right channel) and J107 and J103 (for the left channel), and insert these pins respectively into points J106 and J102 (for the right channel) and J105 and J101 (for the left channel) near the rear panel. (Fig. 3)

Figure 3

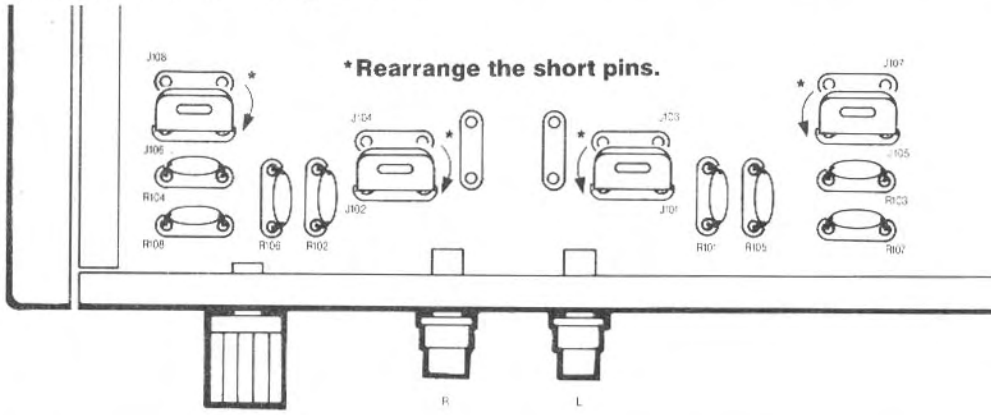

Setting Table

PC board		Function	Factory setting MC type 0.3mV/100Ω	Dealer settings	
				Free input impedance setting for MC type	MM type
Right channel	J108	Selects MC (output)	Short pin	Short pin	Open
	J106	Selects MM (output)	Open	Open	Short pin
	J104	Selects MC (impedance)	Short pin	Short pin	Open
	J102	Selects MM (Impedance)	Open	Open	Short pin
	R106	Sets MC input impedance	100Ω	Replace	100Ω

*When making settings for MM types, the usual impedance being 47kΩ, 2.5mV output (for 2-3mV range), the job can be completed by simply rearranging the short pins. There is no need to change the resistance.

PC board		Function	Factory setting MC type 0.3mV/100Ω	Dealer settings	
				Free input impedance setting for MC type	MM type
Left channel	J107	Selects MC (output)	Short pin	Short pin	Open
	J105	Selects MM (output)	Open	Open	Short pin
	J103	Selects MC (impedance)	Short pin	Short pin	Open
	J101	Selects MM (Impedance)	Open	Open	Short pin
	R105	Sets MC input impedance	100Ω	Replace	100Ω

IMPORTANT
In the event you wish to make changes in the input impedance, please do not open the top cover and attempt to do this work yourself. Because of the danger of electric shocks and the possibility of other problems occurring, please have this work done by your authorized Rotel dealer.

Concerning the 2 Sets of Output Terminals

Two sets of output terminals are provided on the rear panel of the RHQ-10. These terminals have the following characteristics:

FIXED1 Used for output to the passive controller RHC-10 or a normal control amplifier. Output from this unit is maximum 0.775V/100Ω. In this case, the signal inside this unit does not pass through the attenuator.

VARIABLE/FIXED2 This terminal is a VARIABLE terminal when settings inside the unit are not changed. Because the attenuator on the front panel can be used to attenuate output, output from this unit can be connected directly into a power amplifier.

If the cartridge used is an MC type and output is much less than 0.3mV, settings inside this unit must be changed and this terminal becomes a FIXED2 terminal. As a FIXED2 terminal, output from this unit is fixed at 0.775V/100Ω and connected to the RHC-10 passive controller or a control amplifier. FIXED2 settings should be made by authorized Rotel dealers as follows (Fig. 4):

- **Changing settings so that the VARIABLE/FIXED2 terminal can be used as a FIXED2 terminal**

Two red short pins on the PC board toward the rear of the attenuator are moved from VARIABLE to FIXED2.

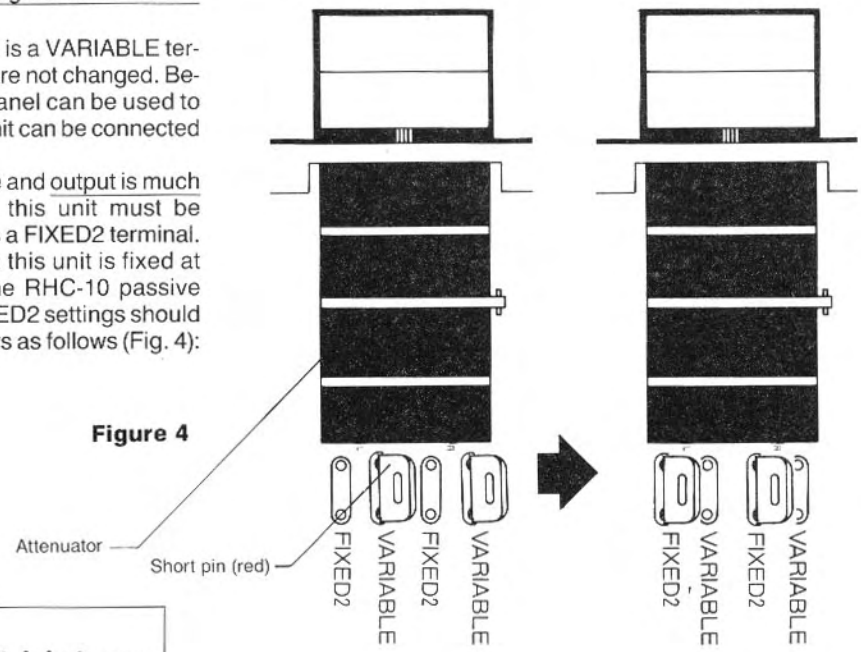

Figure 4

IMPORTANT
In the event you wish to switch between VARIABLE and FIXED2 settings, please do not open the top cover and attempt to do this work yourself. Because of the danger of electric shocks and the possibility of other problems occurring, please have this work done by your authorized Rotel dealer.

Front Panel

(1) Power Switch and Indicator
Power is turned on or off by pushing the power switch. When the power is turned on, an indicator lamp on the switch illuminates. The lamp goes off when the power is turned off.

(2) Attenuator
When the RHQ-10 is connected directly to a power amplifier (with output from the VARIABLE terminal on the rear panel), the signal inside the unit passes through the attenuator. When the attenuator is turned to the right (clockwise), the amount of attenuation in output to the power amplifier is reduced and volume is increased; when it is turned to the left (counter-clockwise), attenuation in the output is increased and the volume reduced. The front piece of the cocentric knob is for the left channel and the inner ring is for the right channel: This feature enables control over left/right balance.

However, when this unit is connected to the RHC-10 passive controller or a control amplifier (with output from the FIXED1 terminal or the VARIABLE/FIXED2 terminal used as a FIXED2 terminal), the attenuator will not work because the signal does not pass through it.

Figure 5

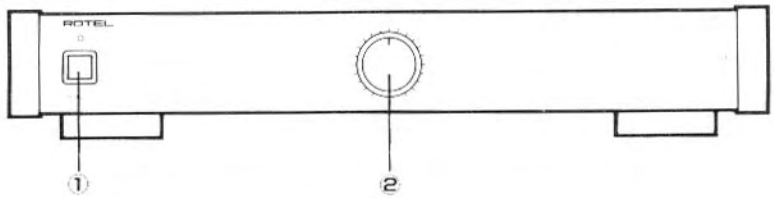

Making Connections

Connection and operation procedures differ according to which output terminal on the rear panel has been selected. Three different configurations are possible.

When a standard MC-type cartridge or an MM-type cartridge is used and output from the RHQ-10 is connected into the RHC-10 passive controller or into a control amplifier, follow Configuration A (Fig. 6a); when a standard MC-type cartridge or an MM-type cartridge is used and output is input directly into a power amplifier, follow Configuration B (Fig. 6b); or when a special MC-type cartridge is used and output is significantly lower than 0.3mV, then follow Configuration C (Fig. 6c).

Configuration A
Standard Connection

Connect the units following this configuration when using a standard MC-type cartridge, with output of around 0.3mV, or an MM-type cartridge. The RHQ-10's attenuator will not work in this case.

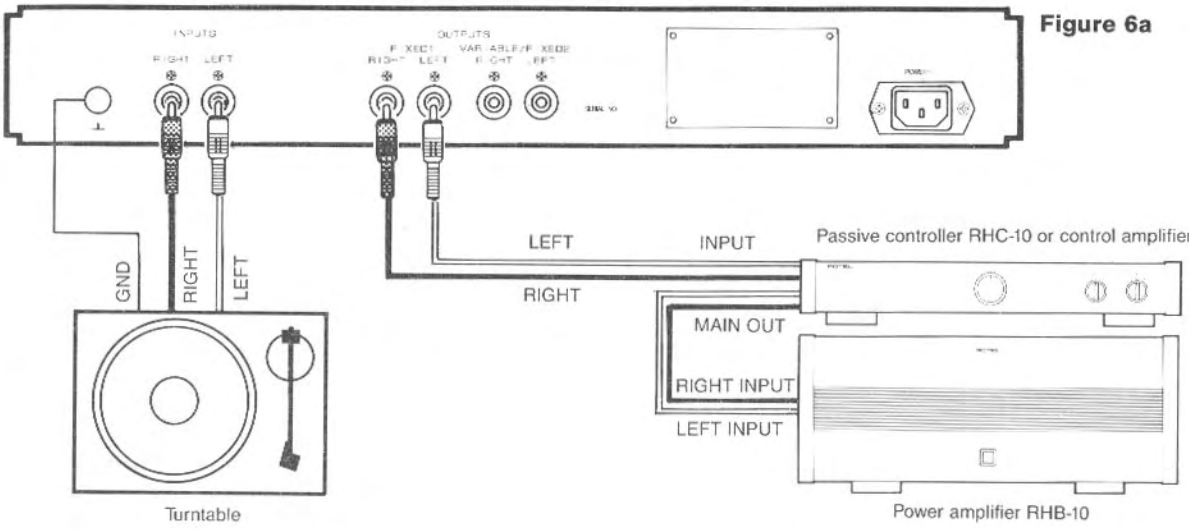

Figure 6a

Configuration B
For Direct Input into a Power Amplifier

Connect the units following this configuration when using a standard MC-type cartridge, with output of around 0.3mV, or an MM-type cartridge, and output is to be made directly to a power amplifier rather than using the RHC-10 passive controller or a control amplifier. Volume can be adjusted using the attenuator on the RHQ-10. When using an MM-type cartridge, however, the settings inside this unit will have to be changed. Please refer to the "Input Level Settings on the RHQ-10" section of this manual.

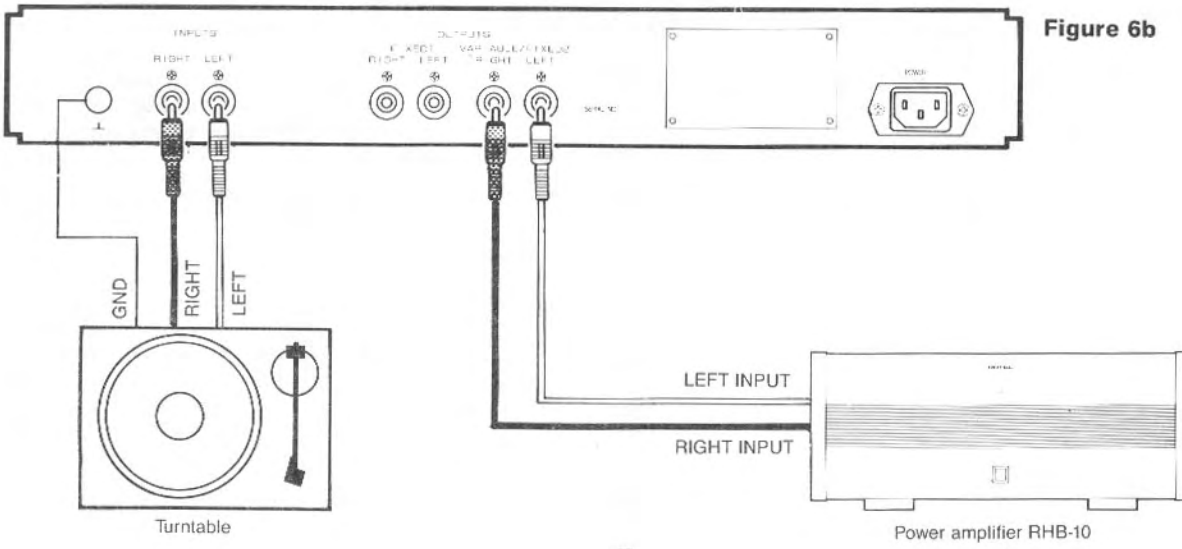

Figure 6b

Configuration C
For MC Cartridges with output significantly lower than reference output of 0.3mV (e.g. 0.1-0.15mV, etc.)
When this kind of special cartridge is used, the VARIABLE/FIXED2 output terminal must be set to the FIXED2 function. This terminal is then connected to the RHC-10 passive controller or a control amplifier. The attenuator on the RHQ-10 will not work.

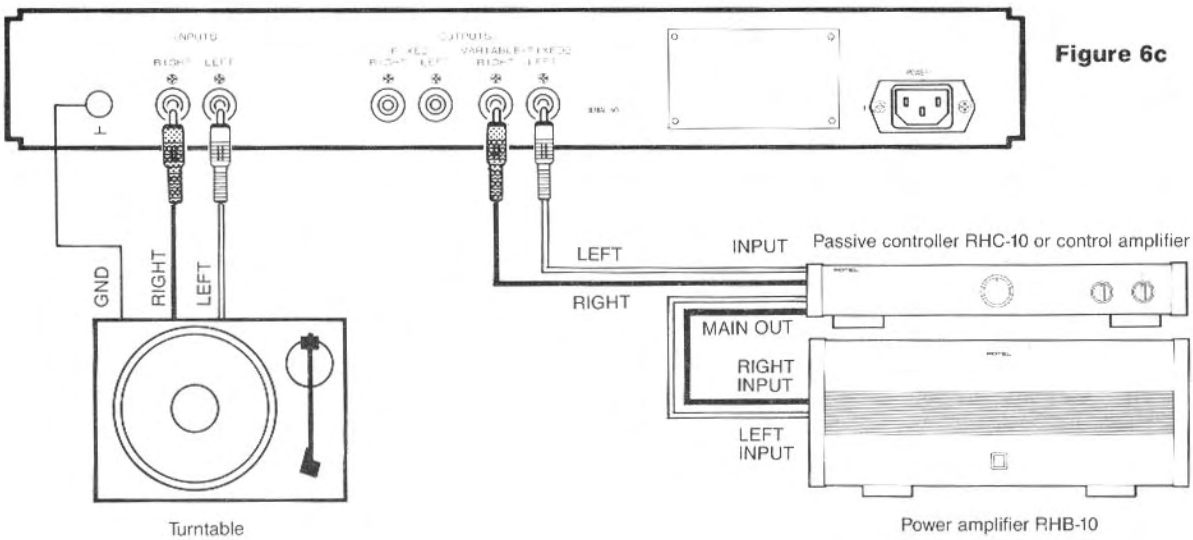

Figure 6c

Operating Instructions

Check to be sure that all components are properly connected. Before turning on the power, turn the volume all the way down. If the RHC-10 passive controller or a control amplifier is connected, turn its attenuator (or volume control) all the way down. If a power amplifier is directly connected, turn the attenuator on the RHQ-10 all the way down. Then turn on the power, start up play of the turntable, and raise the volume to the desired listening level.

"Aging"

New components need to be "aged" or "burned in" in order to stabilize the sound and obtain the best sound quality. We recommend that you let this unit "age" for about 100 hours.

IMPORTANT
It is not necessary to "age" this unit by leaving it turned on for 100 hours continuously. Instead, let the unit "age" for a few hours a day over several days while you enjoy normal listening. During this "aging" period, it is important that you are within eye's reach of the system; when going out or sleeping, for instance, stop the "aging" for the time and turn off the power to the entire system.

Specifications

Input (Sensitivity/ Impedance)	MM: 2.5mV/47 kohms 100pF MC: 0.3mV/100 ohms
RIAA (Accuracy)	20-20,000Hz, ±0.1dB
Output Level	Fixed 1: 0.775V/100 ohms (Rated at 0.3mV input) Variable/Fixed 2: 0.775V/100 ohms (Rated at 0.1mV Input)
Total Harmonic Distortion (20-20kHz)	0.005%
Signal-to-Noise Ratio (IHF A Network)	MM: 90dB MC: 75dB
Overload (THD 0.5%, 1kHz)	MM: 30dB MC: 30dB
Crosstalk (20-20kHz)	80dB
Power Requirement	120V/60Hz,220V/ 50Hz,240V/50Hz
Power Consumption	18 watts
Dimensions (overall)	470 (W) × 76 (H) × 332 (D) mm 18-1/2″ × 3″ × 13-1/16″
Weight (Net)	6.8kg/14.96 lbs.

- Specifications and design subject to possible modification without notice.